Centre Number	Candidate Number	Name

UNIVERSITY OF CAMBRIDGE INTERNATIONAL EXAMINATIONS
General Certificate of Education Advanced Level

PHYSICS **9702/05**

Paper 5 Practical Test

May/June 2004

1 hour 30 minutes

Candidates answer on the Question Paper.
Additional Materials: As specified in the Confidential Instructions.

READ THESE INSTRUCTIONS FIRST

Write your Centre number, candidate number and name on all the work you hand in.
Write in dark blue or black pen in the spaces provided on the Question Paper.
You may use a soft pencil for any diagrams, graphs or rough working.
Do not use staples, paper clips, highlighters, glue or correction fluid.

Answer **both** questions.

You are expected to record all your observations as soon as these observations are made, and to plan the presentation of the records so that it is not necessary to make a fair copy of them. The working of the answers is to be handed in.
Marks are mainly given for a clear record of the observations actually made, for their suitability and accuracy, and for the use made of them.
Additional answer paper and graph paper should be submitted only if it becomes necessary to do so.
You are reminded of the need for good English and clear presentation in your answers.

At the end of the examination, fasten all your work securely together.

If you have been given a label, look at the details. If any details are incorrect or missing, please fill in your correct details in the space given at the top of this page.

Stick your personal label here, if provided.

For Examiner's Use	
1	
2	
Total	

This document consists of **9** printed pages and **3** blank pages.

(KN) S60658/2
© UCLES 2004

It is recommended that you spend about 60 minutes on this question.

1 In this experiment you will investigate how the period of oscillation of a suspended metre rule depends on the distance *d* from the point of suspension to the centre of the rule.

(a) (i) Mount a pin about 50 cm above the bench using a stand, boss and clamp.

(ii) Suspend the rule from the pin by passing it through one of the small holes in the rule. The arrangement should be as shown in Fig. 1.1.

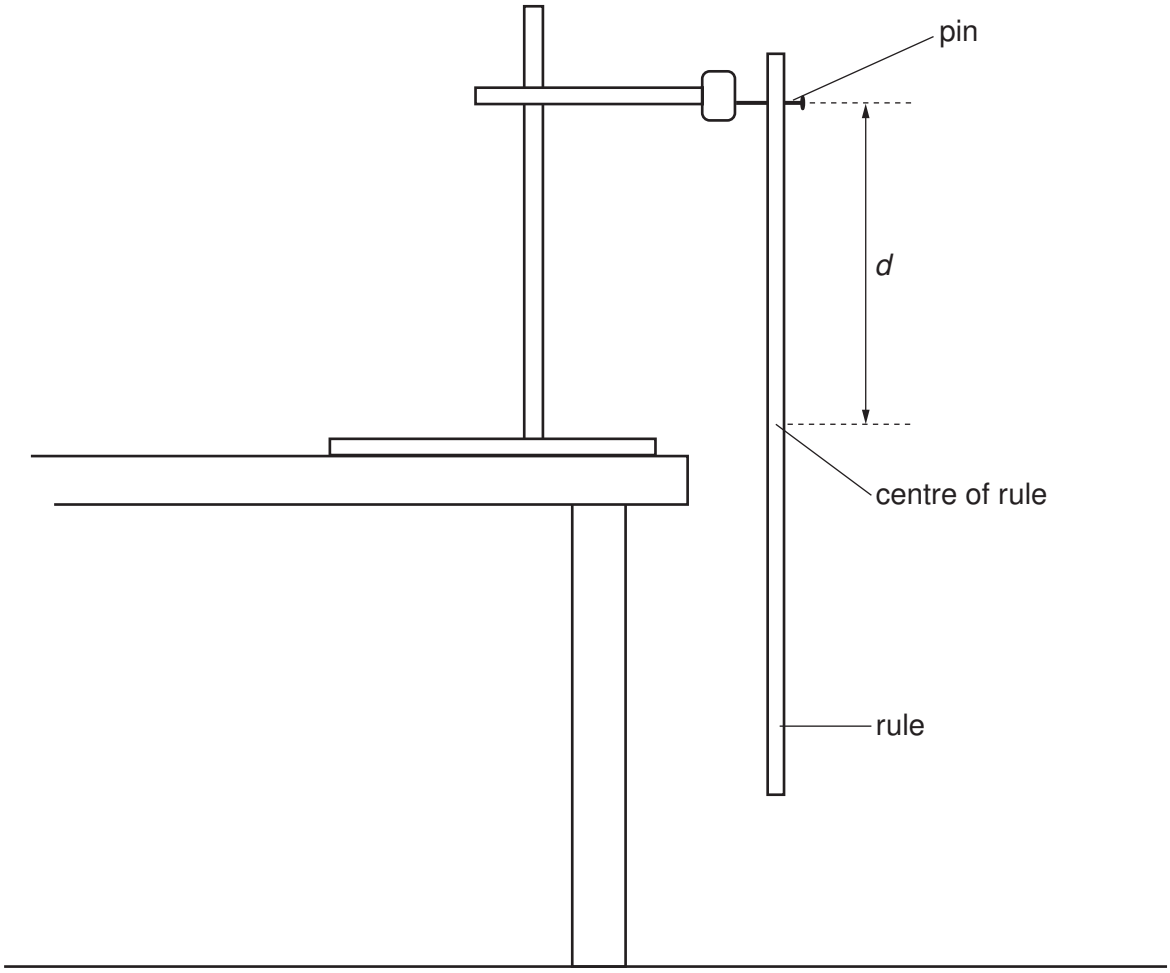

Fig. 1.1

(iii) Measure the distance *d*.

d = ... cm

© UCLES 2004

(iv) Gently displace the rule from its equilibrium position so that the rule performs small oscillations. Make and record measurements to determine the period T of these oscillations.

T = ... s

(v) Explain how you used the vertically-mounted pencil to assist in the measurement of the oscillations.

.....

.....

.....

.....

.....

© UCLES 2004

For Examiner's Use

(vi) Change the value of d by adjusting the position of the rule on the pin. Repeat **(iii)** and **(iv)** until you have six sets of readings for T and d. Include values of T^2d and d^2 in your table of results.

(vii) Justify the number of significant figures that you have given for d^2.

.....

.....

(b) (i) Plot a graph of T^2d (y-axis) against d^2 (x-axis).

(ii) Draw the line of best fit.

(iii) Determine the gradient and the y-intercept of this line.

gradient = ...

y-intercept = ...

© UCLES 2004

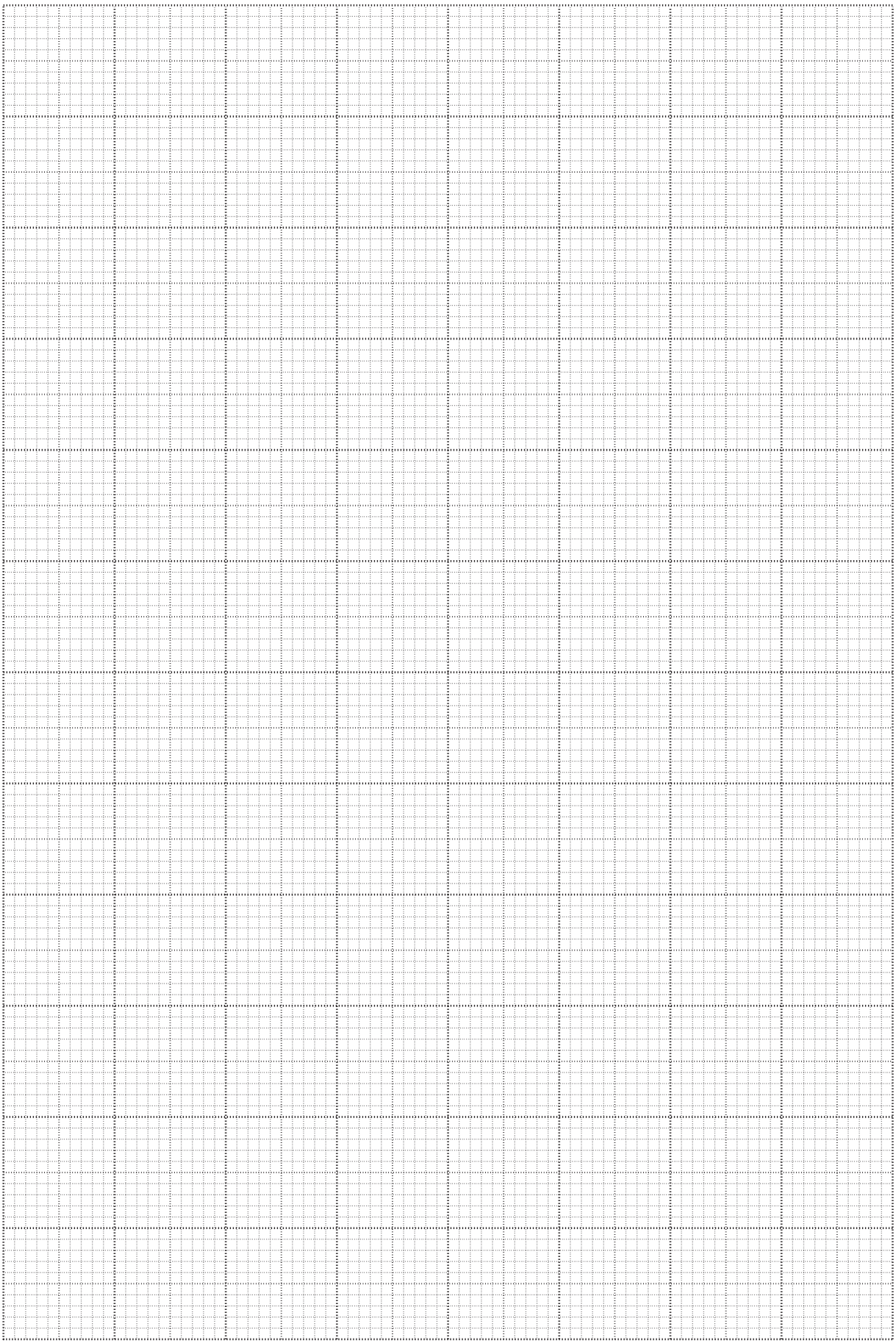

(c) Theory suggests that T and d are related by the equation

$$T^2 = kd + \frac{A}{d}.$$

where k and A are constants.

Use your answers from **(b)(iii)** to find the values of k and A.
Include appropriate units in each case.

k = ...

A = ...

(d) Use the results of your experiment to find a value for T when d = 1.0 cm.

T = ... s

© UCLES 2004

BLANK PAGE

It is recommended that you spend about 30 minutes on this question.

2 Beta particles can be deflected by magnetic fields.

Design a laboratory experiment to investigate how magnetic flux density affects the angle through which beta particles are deflected when they pass through a uniform magnetic field. The only radioactive source that is available to you is a Radium-226 source which emits α, β and γ radiation.

You should draw a diagram showing the arrangement of your apparatus. In your account you should pay particular attention to

(a) the procedure to be followed,

(b) the method by which beta particles **only** would be detected,

(c) the method of measuring the angle of deflection,

(d) how the magnetic field would be produced, measured and changed,

(e) any safety precautions you would take.

© UCLES 2004

Diagram

.....

.....

.....

.....

.....

.....

.....

.....

.....

.....

© UCLES 2004

© UCLES 2004

BLANK PAGE

BLANK PAGE

University of Cambridge International Examinations is part of the University of Cambridge Local Examinations Syndicate (UCLES), which is itself a department of the University of Cambridge.